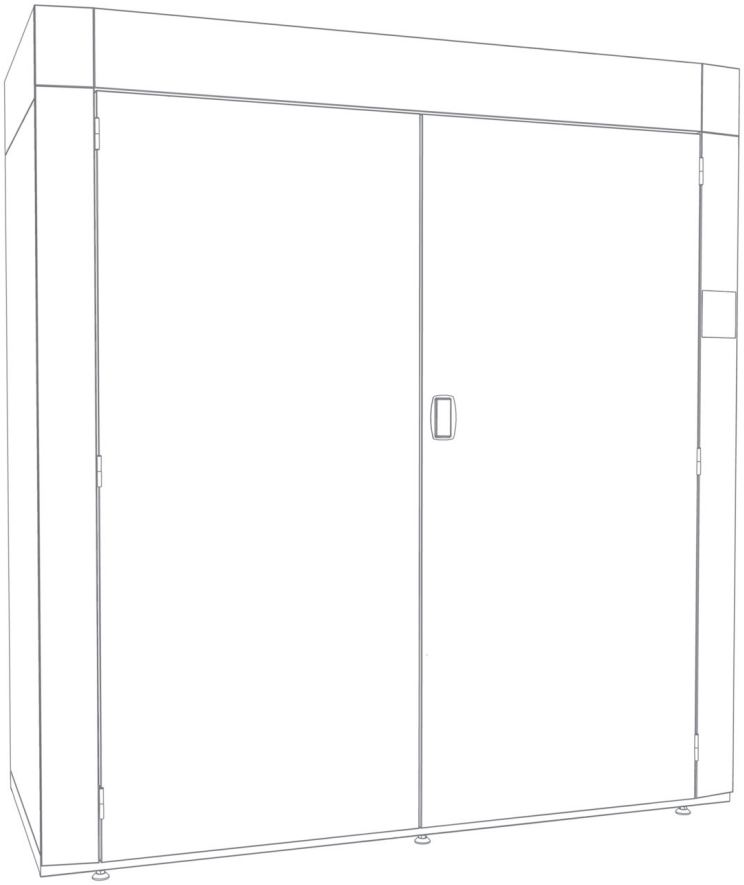

Service manual and spare parts list

Drying cabinet ProLine FC 20

PODAB

Thank you for choosing drying cabinet FC 20. We hope that it will be of great use for you.

Contents

Specification

Dimensions

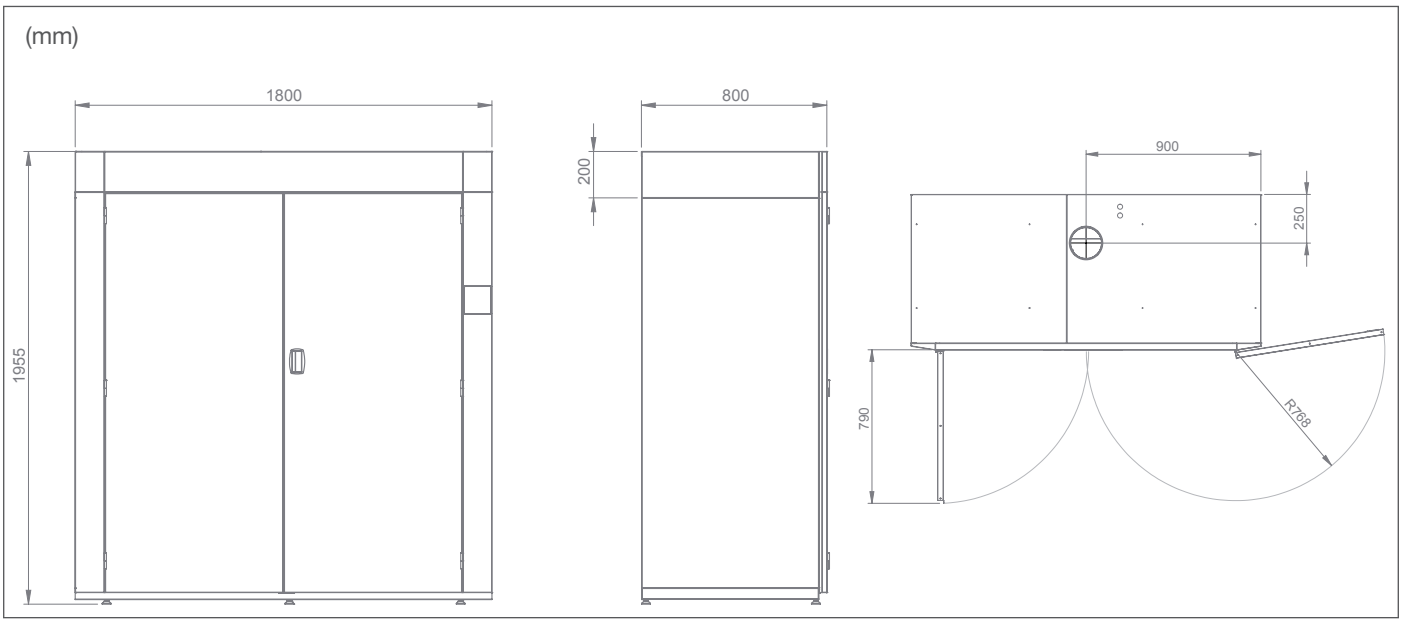

Technical information

Main data	
Loading capacity, number of suits	6
Evacuated air, max, m³/h	600

Drying program	Membrane	Cotton wool
Drying capacity, g/min *	55	46
Drying time, min *	166	65
Energy consumption, kWh	19,6	6,8
*Drying of 20 kg fire suits (dry weight) washed and high-spinned to 5o % residual moisture for membrane suits and 15 % for cotton wool suits. Dried to 4 % residual moisture.		

Electrical connection	3~N, 380-415V, 50/60Hz	3~, 220-240V, 50/60Hz	3~, 440V, 50/60Hz	3~, 480V, 50/60Hz
Fuse, A	20	32	20	16
Heating effect, kW	12,0	12,0	12,0	12,0
Total effect, kW	12,45	12,45	12,45	12,45

Main control board

The drying cabinet can be customized by adjusting the main control board´s parameters. The following pages describe how to adjust the parameters.

Setup menu

Activate the setup menu

To enter the setup menu; press both the ”P” button and the ”+” button for about 5 seconds until the screen shows ”SETUP MENU FC20”. Push the START button, 5 times continuously, to enter the parameter list.

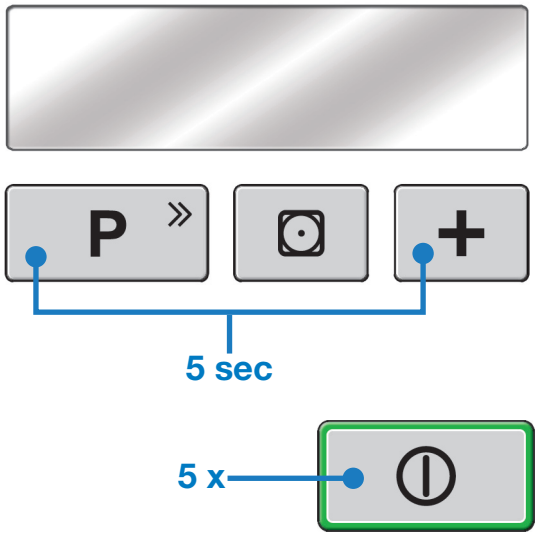

Navigate the setup menu

The parameter names are shown on row 1 and 2 on the screen. The value is shown on the bottom row. Use the ”P” button to browse in the parameter list.

Change parameter values

The ”+” button increases a numeric value and is used for toggling ON/OFF functions. The hidden button between the ”P” button and the ”+” button can be used to decrease numeric values.

Leave the setup menu

To leave the menu, push the ”START” button.

Parameter list

Parameter	Alternative	Factory position
SOFTWARE VERSION	-	[version name]
RESET	YES	-
STANDBY	ON/OFF	ON
TEMPERATURE PR1	30-80	80
TEMPERATURE PR2	30-80	80
TEMPERATURE PR3	30-80	60
TEMPERATURE PR4	30-80	80
TEMPERATURE REACTIVATION	30-80	80
HYSTERESIS	1-10	10
HYSTERESIS REACTIVATION	1-10	3
COOL DOWN	5-15	15
ΔF STOP AUTOMATIC DRYING	-50 % -> +50 %	0
MEMBRANE PR1	ON/OFF	ON
WITHOUT MEMBRANE PR2	ON/OFF	ON
STATIONWEAR PR3	ON/OFF	ON
TIMED DRYING PR4	ON/OFF	ON
REACTIVATION TIME PR 1	0:00h-1:00h	0:30h
REACTIVATION TIME PR2	0:00h-1:00h	0:30h
REACTIVATION TIME PR3	0:00h-1:00h	0:00h
MAXIMUM TIME	0:30h-10:00h	5:00h
DELAY START	ON/OFF	OFF
CHILD LOCK	ON/OFF	OFF
SOUND	ON/OFF	ON
LOGOTYPE	ON/OFF	ON
LANGUAGE	SVENSKA/NORSK/DANSK/ ENGLISH/FRANÇAIS/ DEUTSCH/ESPAÑOL/SUOMI	ENGLISH
COIN	ON/OFF	OFF
COIN SIGNAL TYPE	NORMALLY OPENED/ NORMALLY CLOSED/PULSE	NORMALLY OPENED
OPERATING HOURS	-	00000h
ERROR LOG	-	EMPTY

Explanation of parameters

SOFTWARE VERSION
The name of the installed software file is shown.

RESET
Only shown if any parameter's default value has been changed. If option "YES" is pushed, all the parameters are reset to their factory position.

TEMPERATURE PR1
Setting of the drying temperature for program MEMBRANE.

TEMPERATURE PR2
Setting of the drying temperature for program WITHOUT MEMBRANE.

TEMPERATURE PR3
Setting of the drying temperature for program STATIONWEAR.

TEMPERATURE PR4
Setting of the drying temperature for program TIMED DRYING.

TEMPERATURE REACTIVATION
Setting of the drying temperature for the reactivation phase. During this phase the evacuation fan is swithed off. The temperature inside the cabinet increases in order to improve the hardening of impregnation solvents.

HYSTERESIS
Controls the hysteresis. FC 20 is preset to 10 °C. When the working temperature is attained the heating elements are turned off. When the temperature has dropped 10 °C the heating starts again.

HYSTERESIS REACTIVATION
Controls the hysteresis during the reactivation phase.

COOL DOWN
After the heating phase and the reactivation phase (if activated) the cabinet has a period of cool down to recondition the laundry and lower the temperature within the cabinet.

ΔF STOP AUTOMATIC DRYING
Adjusts the automatic drying function. Can be changed if needed. If the value is decreased (negative %-value), the drying time is prolonged for all automatic programs.

MEMBRANE PR1
Turns the MEMBRANE program ON/OFF in user mode.

WITHOUT MEMBRANE PR2
Turns the WITHOUT MEMBRANE program ON/OFF in user mode.

STATIONWEAR PR3
Turns the STATIONWEAR program ON/OFF in user mode.

TIMED DRYING PR4

Turns the TIMED DRYING program ON/OFF in user mode.

REACTIVATION TIME PR1

Decides the duration of the reactivation phase for program MEMBRANE. If the time is set to 0:00h the program skips to cool down immediately after the drying phase is finished.

REACTIVATION TIME PR2

Decides the duration of the reactivation phase for program WITHOUT MEMBRANE. If the time is set to 0:00h the program skips to cool down immediately after the drying phase is finished.

REACTIVATION TIME PR3

Decides the duration of the reactivation phase for program STATIONWEAR. If the time is set to 0:00h the program skips to cool down immediately after the drying phase is finished.

MAXIMUM TIME

Controls the maximum time that can be set at timed drying. The parameter also controls the maximum drying time for the automatic programs.

DELAY START

This parameter activates delayed start. If the parameter is set to ”ON” the user is given the choice to delay the program start with up to 24:00h.

CHILD LOCK

It is possible to activate a child lock function. When set to ”ON” the user has to press and hold the ”P” button while pushing start.

SOUND

In mode “ON” there is a beep sound every time an active button is pushed or when a drying program is finished.

LOGOTYPE

Turns the PODAB-logo, shown on the welcome screen, ON/OFF.

LANGUAGE

The cabinet has seven languages.

COIN

The cabinet can be connected to a booking system. To activate the function, set the parameter in position “ON”. To start a program a signal to the COIN plinth is needed.

COIN SIGNAL TYPE

This parameter is only visible if COIN is activated. COIN is used when the cabinet is connected to a booking system. Choose position depending on which type of signal the booking system is sending.

NORMALLY OPENED should be chosen when there is a signal to the COIN plinth when the cabinet has been booked. A running program will finish even if the signal is interrupted.

NORMALLY CLOSED should be chosen when there is a signal to the COIN plinth when the cabinet has not been booked.

PULSE means that the cabinet is booked per drying period. One pulse gives one drying period.

OPERATING HOURS

The parameter shows the total amount of hours the cabinet has been running. Saved on the memory unit even if the power to the control board is cut.

ERROR LOG

Error messages are memorized in a log. If the log is empty the screen shows the text ”EMPTY”. If there are messages that have been logged it is possible to toggle with the P button. When all errors have been displayed the log can be cleared.

Error messages

TEMP SENSOR FAILURE

The control board gets no signal from the temperature sensor. The cabinet is out of function until the error is solved. Check if the sensor is connected correctly on the main control board, and that the cable from the sensor to the board is intact.

MAX TEMP REACHED

If the temperature registered by the temperature sensor rises above 100°C a cool down period starts. The heat is reactivated when the temperature has dropped to 50°C.

OVERHEATING

The control board's electronically overheat protection has been activated. The error code is generated if the temperature registered by the temperature sensor rises above 100ºC, twice within 30 minutes.

Control that the fan motors are working as they should. Also control the temperature sensor and that the cable from the board is intact.

MAX TIME REACHED

This code is generated if the maximum drying time of 5h (default) is reached. The drying time can exceed the limit if the cabinet is over loaded or if the textiles has a very high residual moisture level when the program starts. If desired the maximum time can be adjusted.

HUMIDITY SENSOR

Control board gets no signal from the temperature sensor. Control that the sensor is connected correctly on the main control board and that the cable from the sensor to the board is intact.

Spare parts list

Cabinet

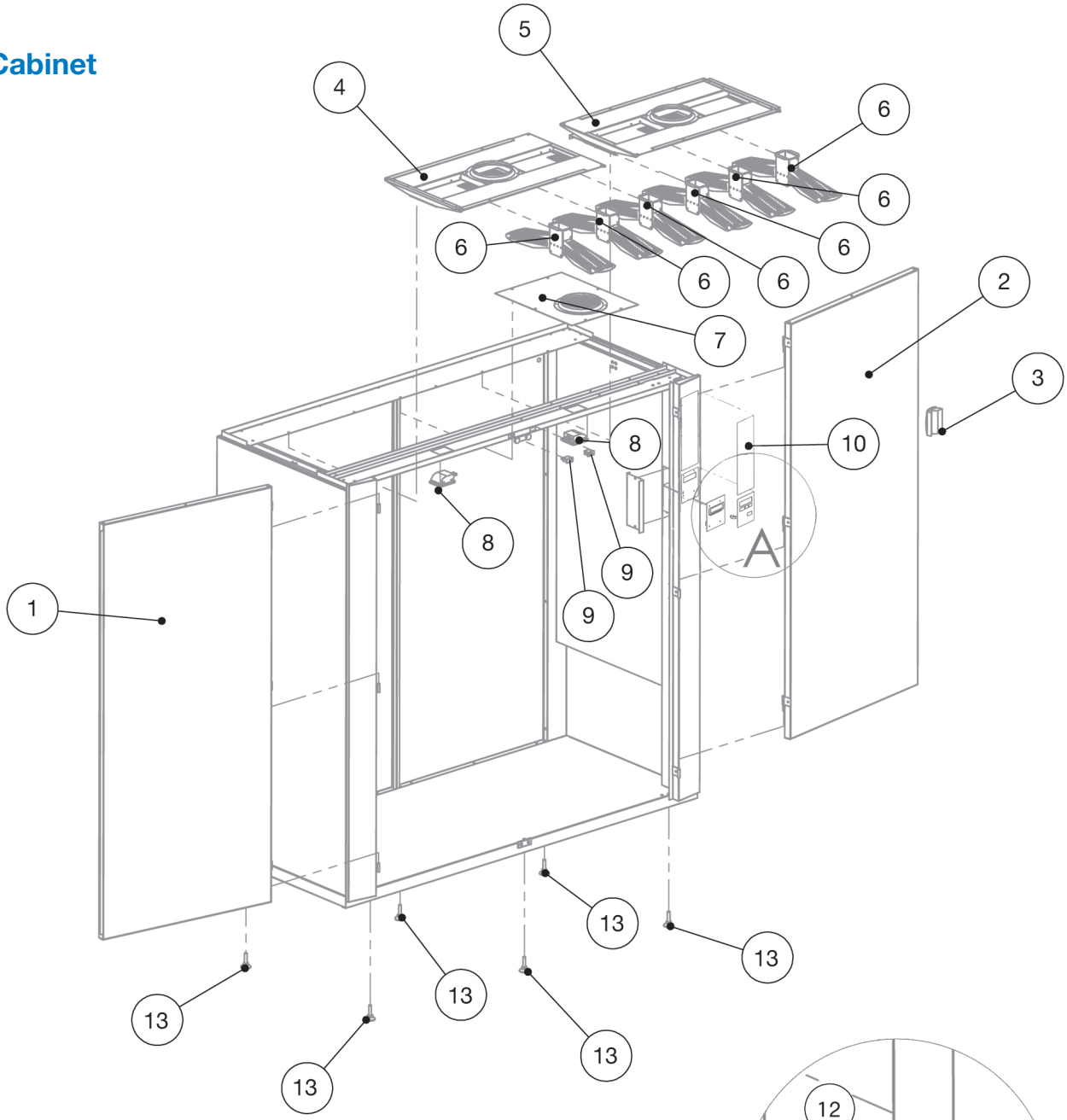

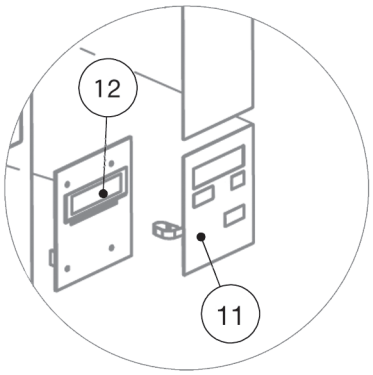

Detailed view A

No	Part No	Description
1	TS61053	Door left
2	TS61054	Dor right
3	TS 61086	Handle
4	TS61055	Hanger frame left
5	TS61056	Hanger frame right
6	TS61057	Hanger
7	TS61058	Service door (middle fan)
8	TS 61081	Lamp
9	70107001	Door switch
10	011070	Sticker user instructions
11	0110166	Keypad
12	0110161	Display control board
13	TS61094	Foot

Top

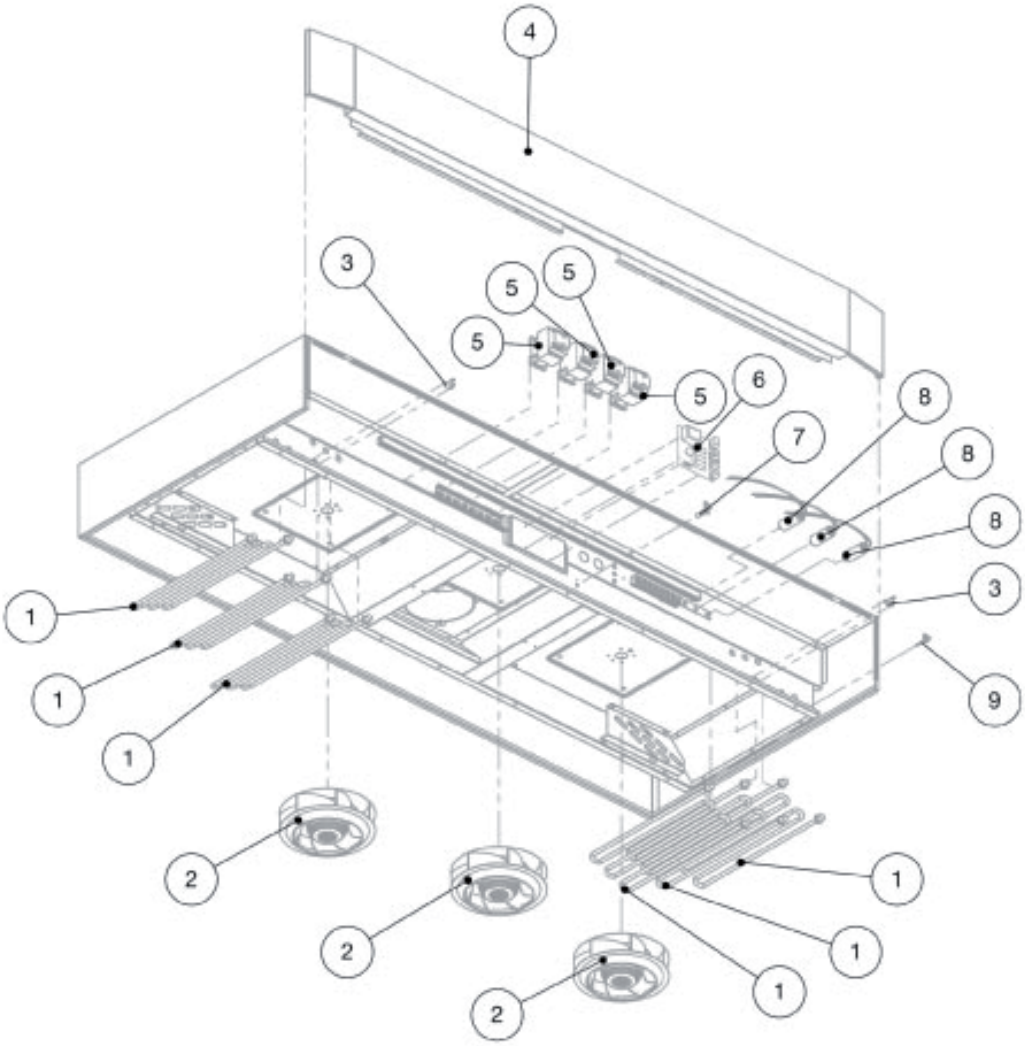

No	Part No	Description
1	TS 61080	Heater 2000 W
2	E 150020	Fan motor
3	TS61028	Overheat protection 160°C
4	TS61052	Front panel
5	TS61062	Contactor LC1-K0610M72
6	0110160	Relay board
7	0110174	Humidity sensor
8	TS 61083	Condensator
9	0110165	Temperature sensor

Electric drawing

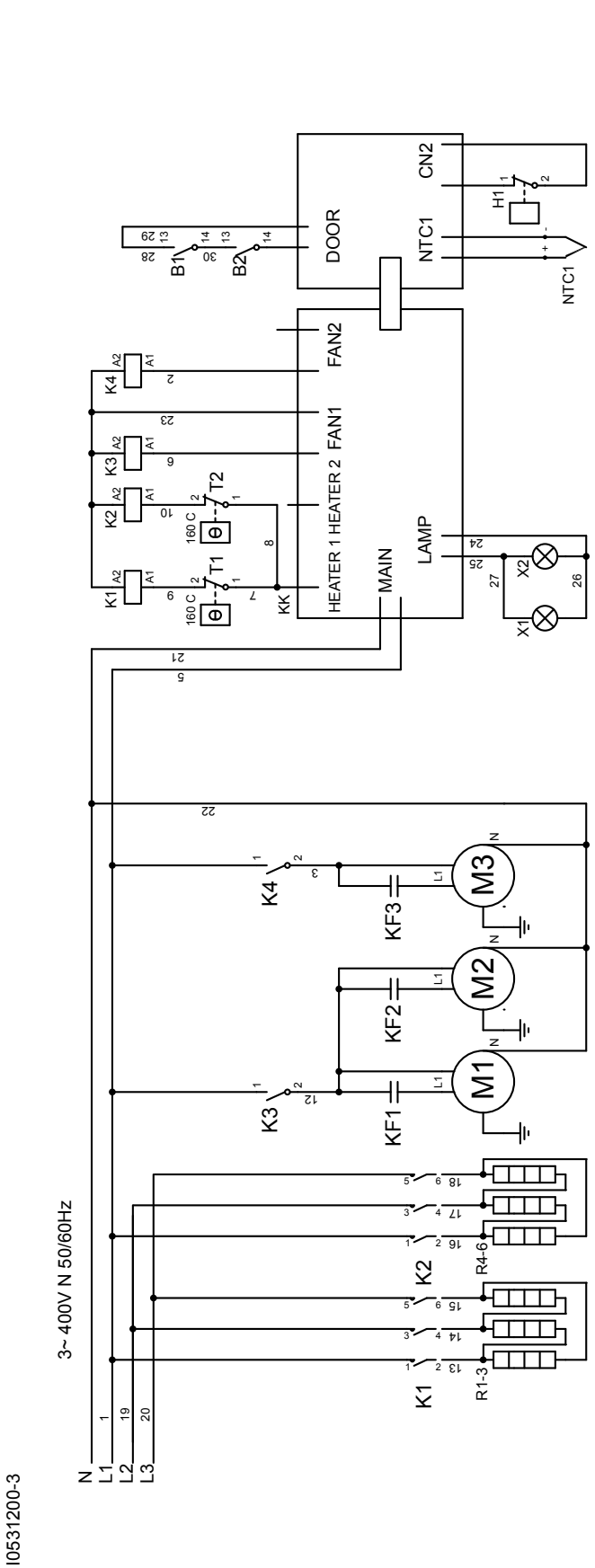

M1	Fläktmotor 1	Fan motor 1
M2	Fläktmotor 2	Fan motor 2
M3	Fläktmotor 3	Fan motor 3
KF1	Kondensator 1	Capacitor 1
KF2	Kondensator 2	Capacitor 2
KF3	Kondensator 3	Capacitor 3
K1	Kontaktor värme 1	Heat contactor 1
K2	Kontaktor värme 2	Heat contactor 2
K3	Kontaktor fläkt 1	Fan contactor 1
K4	Kontaktor fläkt 2	Fan contactor 2
B1	Mikrobrytare dörr 1	Door switch 1

Ventilateur 1		
Ventilateur 2		
Ventilateur 3		
Condensateur 1		
Condensateur 2		
Condensateur 3		
Contacteur chaleur 1		
Contacteur chaleur 2		
Contacteur fan 1		
Contacteur fan 2		
Interrupteur porte 1		

B2	Mikrobrytare dörr 2	Door switch 2
X1	Lampa 1	Lamp 1
X2	Lampa 2	Lamp 2
H1	Fuktsensor	Humidity sensor
NTC1	Termostat	Thermostat
R1-R3	Element 1-3	Heat element 1-3
R4-R6	Element 4-6	Heat element 4-6
T1	Överhettningsskydd 1	Over heat protection 1
T2	Överhettningsskydd 2	Over heat protection 2
KK	Kretskort	Circuit board

Interrupteur porte 2		
Lampe 1		
Lampe 2		
Hygrometre		
Thermostat		
Chauffage 1-3		
Chauffage 4-6		
Protection surchauffe 1		
Protection surchauffe 2		
Platine de circuits		

I0531200-3

SERVICE/SUPPORT

Phone +46 31-752 01 70

E-mail support@podab.se

www.podab.com

AB PODAB, Ekonomivägen 9, 436 33 Askim, SWEDEN
Tel +46 (0)31-752 01 00, E-mail: export@podab.se, www.podab.com